EXAMTOPICS

-Expert Verified, Online, **Free**.



CERTIFICATION TEST

-CertificationTest.net - Cheap & Quality Resources With Best Support

Question #1 *Topic 1*

Click the Exhibit button.

You want to limit port access to only one device at a time.
Referring to the exhibit, which configuration change will accomplish this task?

```
user@switch> show dot1x interface ge-0/0/10.0 detail
ge-0/0/10.0
  Role: Authenticator
  Administrative state: Auto
  Supplicant mode: Single
  Number of retries: 3
  Quiet period: 60seconds
  Transmit period: 30seconds
  Mac Radius: Disabled
  Mac Radius Restrict: Disabled
  Reauthentication: Enabled
  Configured Reauthentication interval: 3600seconds
  Supplicant timeout: 30seconds
  Server timeout: 30seconds
  Maximum EAPOL requests: 2
  Guest VLAN member: 24
  Number of connected supplicants: 2
```

A. Enable MAC RADIUS restrict.

B. Change the supplicant mode to multiple.

C. Change the supplicant mode to single-secure.

D. Change the maximum EAPOL request to 1.

Suggested Answer: *C*

Currently there are no comments in this discussion, be the first to comment!

Question #2 *Topic 1*

Your OSPF network consists of a mix of 1GbE and 10GbE interfaces. By default, all interfaces have the same cost in your OSPF network. You are asked to ensure that the 10GbE interfaces are more preferred when available.
In this scenario, which two statements would accomplish this behavior? (Choose two.)

A. You should define the reference bandwidth as 10G, which will assign the 1GbE interfaces a higher cost.

B. You should manually assign the interface metric for each 10GbE interface to be higher than the 1GbE interfaces in your OSPF network.

C. You should define the reference bandwidth as 1G, which will assign the 1GbE interfaces a higher cost.

D. You should manually assign the interface metric for each 1GbE interface to be higher than the 10GbE interfaces in your OSPF network.

Suggested Answer: *A, D*

Currently there are no comments in this discussion, be the first to comment!

Question #3 *Topic 1*

You have two multicast receivers connected to the same VLAN. You notice that the switch that they are connected to is forwarding multicast traffic out of all the ports in the same VLAN, instead of just the two ports for the connected multicast receivers.
In this scenario, what would you configure to optimize multicast forwarding?

A. promiscuous mode

B. spanning tree

C. IGMP snooping

D. IRB interface

Suggested Answer: *C*

Currently there are no comments in this discussion, be the first to comment!

Question #4 *Topic 1*

You are implementing an EVPN-VXLAN edge-routed bridging design using Layer 3 gateway operations.
In this scenario, which statement is correct?

A. Each distribution switch has unique IP addresses for IRB interfaces; routing protocols run on IRB interfaces.

B. Distribution switches share the same anycast IP addresses for IRB interfaces; routing occurs at the distribution layer.

C. Only core switches have IRB interfaces; all Layer 3 routing happens in the core.

D. IRB interfaces are disabled; all routing happens through external routers only.

Suggested Answer: *B*

Currently there are no comments in this discussion, be the first to comment!

Question #5 *Topic 1*

Which statement about LLDP and LLDP-MED operations on EX Series devices is correct?

A. LLDP only operates on interfaces configured for Layer 2.

B. EX Series devices flood LLDP frames across a Layer 2 domain to calculate a network topology.

C. EX Series devices support LLDP-MED power negotiation, enabling dynamic allocation of PoE power based on endpoint device needs.

D. LLDP-MED focuses on discovering network connectivity devices like routers and switches.

Suggested Answer: *C*
LLDP-MED supports endpoint power negotiation for PoE allocation.

Currently there are no comments in this discussion, be the first to comment!

Question #6 *Topic 1*

Click the Exhibit button.

Referring to the exhibit, leaf2 is elected the designated forwarder.
Which two statements are correct if server2 generates a broadcast frame? (Choose two.)

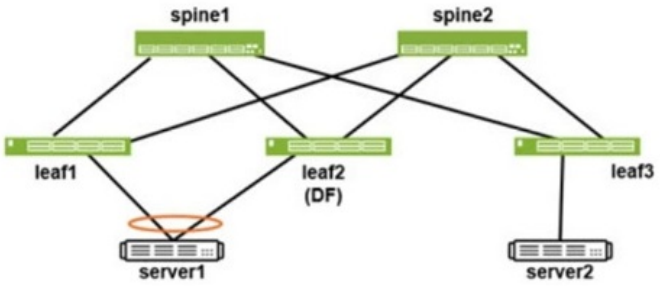

A. The broadcast frame will be forwarded to leaf1 and leaf2.

B. The broadcast frame will not be forwarded to leaf1.

C. Only leaf2 will forward the broadcast frame to server1.

D. Only leaf1 will forward the broadcast frame to server1.

Suggested Answer: *B, C*

Currently there are no comments in this discussion, be the first to comment!

Question #7 *Topic 1*

Which two statements correctly describe how EX Series switches use captive portal for Layer 2 authentication? (Choose two.)

A. The captive portal is the default Layer 2 authentication method that is applied before other methods such as 802.1X or MAC RADIUS.

B. The captive portal authentication allowlist works for devices that do not have HTTP capabilities.

C. The captive portal is configured on Layer 3 interfaces and does not participate in Layer 2 authentication on EX Series switches.

D. The captive portal is used as a fallback mechanism for clients that fail 802.1X or MAC RADIUS authentication.

Suggested Answer: *A, D*

Currently there are no comments in this discussion, be the first to comment!

Question #8 *Topic 1*

Click the Exhibit button.

Referring to the exhibit, which two statements are correct? (Choose two.)

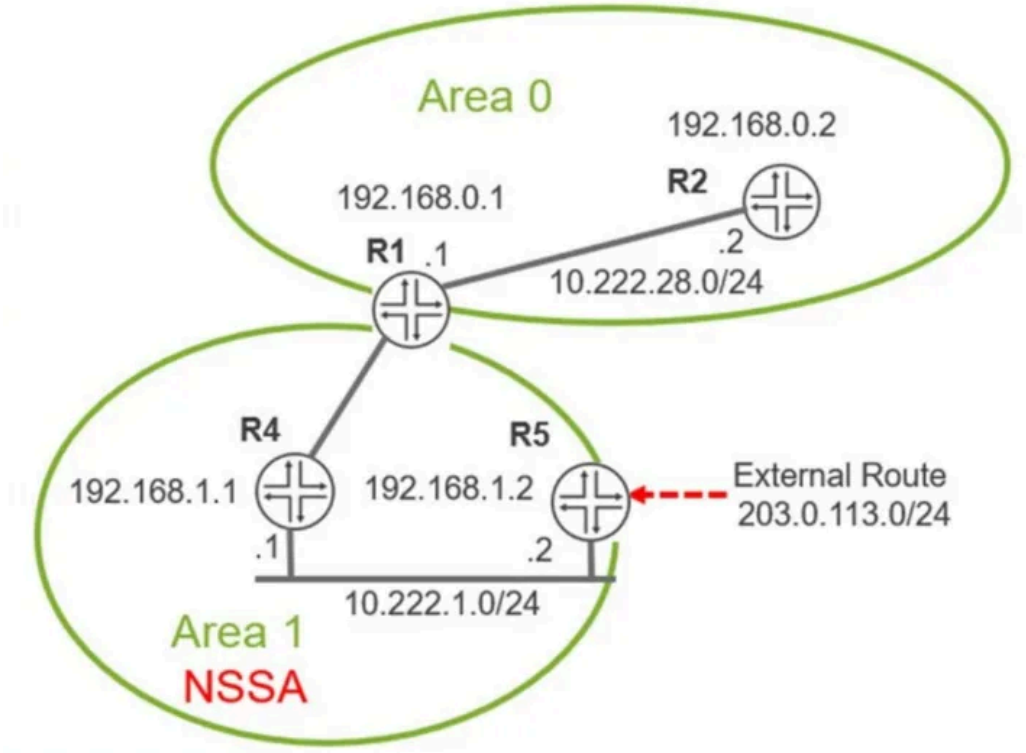

A. R1 will advertise the 203.0.113.0/24 route as an OSPF Type 7 LSA into Area 0.

B. R5 will advertise the 203.0.113.0/24 route as an OSPF Type 5 LSA into Area 1.

C. R1 will advertise the 203.0.113.0/24 route as an OSPF Type 5 LSA into Area 0.

D. R5 will advertise the 203.0.113.0/24 route as an OSPF Type 7 LSA into Area 1.

Suggested Answer: *C, D*

Currently there are no comments in this discussion, be the first to comment!

Question #9 *Topic 1*

You are deploying a new campus switching environment using EX Series switches. This new environment includes IP phones requiring Power over Ethernet (PoE) and end-user client PCs attached to a single switch port that will be configured with 802.1X authentication.

Considering the default configuration on an EX Series access switch and the configuration requirements to support this deployment, which two statements are correct? (Choose two.)

A. Configuration for the voice VLAN for all relevant access ports must be added.

B. Configuration for PoE on all relevant access ports must be added.

C. Configuration for LLDP and LLDP-MED on all relevant access ports must be added.

D. Configuration for 802.1X on all relevant access ports must be added.

Suggested Answer: *A, D*
Configure voice VLAN support and 802.1X; PoE and LLDP-MED are enabled by default.

Currently there are no comments in this discussion, be the first to comment!

Question #10 *Topic 1*

Which two statements are correct about multicast routing tables? (Choose two.)

A. inet.2 is used when the multi cast forwarding topology differs from unicast forwarding.

B. MBGP and IS-IS place routes in inet.1 directly.

C. inet.0 is used for RPF checks.

D. IS-IS and OSPFv3 place routes in inet.2 directly.

Suggested Answer: *A, C*
inet.2 supports a multicast forwarding topology distinct from unicast; inet.0 supports RPF.

Currently there are no comments in this discussion, be the first to comment!

Question #11 *Topic 1*

Click the Exhibit button.

Referring to the exhibit, you see that the 0.0.0.0/0 route is coming from AS 64512.

What is the command to achieve this task?



A. show route receive-protocol bgp

B. show route protocol bgp source-gateway

C. show route protocol bgp next-hop

D. show route receive-protocol bgp hidden

Suggested Answer: *A*
Use the BGP receive-protocol view to inspect routes advertised by a specific peer.

ComSource Most Recent 1 month, 3 weeks ago

Selected Answer: D

The key detail in the exhibit is that the route 0.0.0.0/0 from AS 64512 is received from the BGP peer, but it is rejected by the import policy.

Because the route is rejected by policy, Junos keeps it as a hidden route.

Use:

show route receive-protocol bgp <peer-ip> hidden

This command shows routes received from a BGP neighbor that are currently hidden, including routes rejected by an import policy.

For the exam, remember:

show route receive-protocol bgp <peer-ip> → shows received routes

show route receive-protocol bgp <peer-ip> hidden → shows hidden/rejected routes

Since the policy says “Reject 0.0.0.0/0 from AS 64512”, the hidden keyword is required.

upvoted 1 times

nli 1 month, 3 weeks ago

Selected Answer: D

The route is being received from AS 64512 but rejected by the Import Policies (1) Reject 0.0.0.0/0 from AS...., so it appears as a hidden BGP route.

upvoted 1 times

mimo1000 2 months, 1 week ago

Selected Answer: A

I will go with A because we only need to verify what routes were received from a specific BGP peer. hidden is used when specifically looking for hidden/unusable routes

upvoted 1 times

gentlesol 2 months, 2 weeks ago

Selected Answer: D

Answer is D

show route receive-protocol bgp <peer ip> shows the active route after policy filter

show route receive-protocol bgp <peer ip> hidden displays the routes filtered by the import policy

Since 0/0 from AS64512 didnt make it, it was filtered by Policy hence the need to use "show route receive-protocol bgp <peer ip> hidden"

upvoted 2 times

Dlock79 2 months, 3 weeks ago

Selected Answer: A

In the exhibit, you can see that in RIB-in appear the route 0/0 from AS64512, so for to check the RIB-in you use the command: show route receive-protocol bgp <peer ip>, not use hidden

upvoted 2 times

Question #12 *Topic 1*

Click the Exhibit button.

Your network receives the full Internet BGP routing table from two different ISPs. You want your local routers to use Provider A to forward all Internet traffic as long as Provider A is available.
Referring to the exhibit, which two actions would satisfy this requirement? (Choose two.)

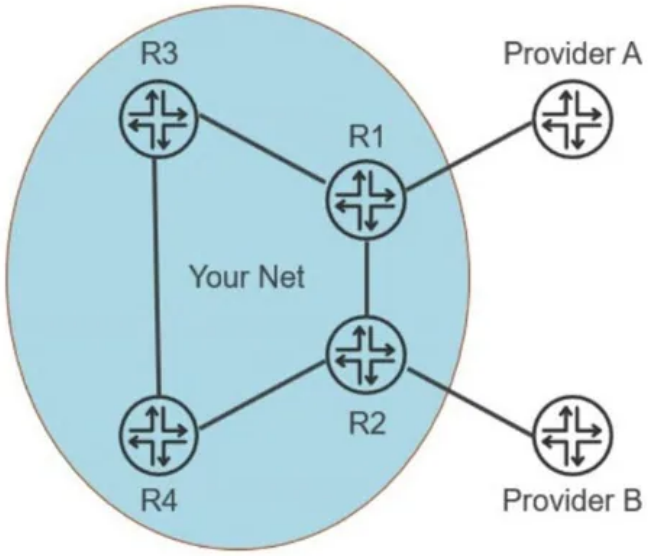

A. Use a routing policy to set the local preference attribute value higher for the routes that are learned by R1.

B. Use a routing policy to set the local preference attribute value higher for the routes that are learned by R2.

C. Use a routing policy to set the local preference attribute value lower for the routes that are learned by R2.

D. Use a routing policy to set the local preference attribute value lower for the routes that are learned by R1.

Suggested Answer: *B, C*

Currently there are no comments in this discussion, be the first to comment!

Question #13 *Topic 1*

Click the Exhibit button.

Referring to the exhibit, what is required for the BGP peering to establish?

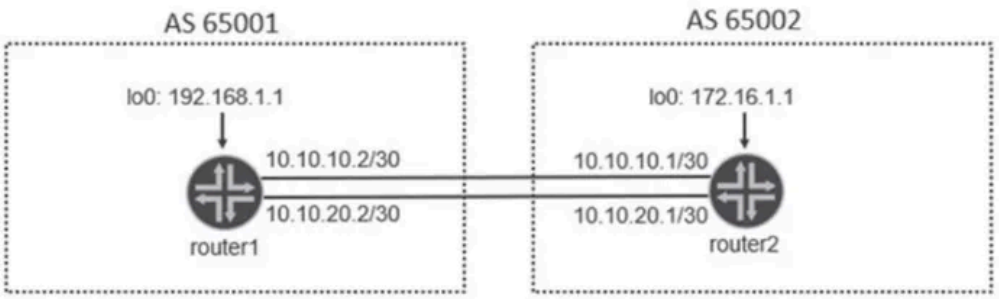


```
user@router1> show configuration protocols bgp group ext-peers
type external;
local-address 192.168.1.1;

user@router1> show configuration routing-options
static {
   route 172.16.1.1 next-hop [ 10.10.10.1 10.10.20.1 ];
}
```

A. Configure neighbor 172.16.1.1 multipath under the ext-peers hierarchy.

B. Configure neighbor 10.10.20.1 multihop under the ext-peers hierarchy.

C. Configure neighbor 10.10.10.1 multihop under the ext-peers hierarchy.

D. Configure neighbor 172.16.1.1 multihop under the ext-peers hierarchy.

Suggested Answer: *D*

The configured next hop is not directly connected; use multihop to reach the loopback peer.

Currently there are no comments in this discussion, be the first to comment!

Question #14 *Topic 1*

Which two EVPN types advertise an ESI without advertising a MAC address? (Choose two.)

A. Type 1

B. Type 2

C. Type 3

D. Type 4

Suggested Answer: *A, C*

Currently there are no comments in this discussion, be the first to comment!

Question #15 *Topic 1*

Click the Exhibit button.

Referring to the exhibit, which statement is correct?

```
user@device1# show interfaces
ge-0/0/1 {
    unit 0 {
        family inet {
            address 192.168.14.1/24;
        }
    }
}
user@device1# show protocols
ospf {
    area 0.0.0.0 {
        interface ge-0/0/1.0 {
        priority 0;
        }
    }
}
------------------------------
user@device2# show interfaces
ge-0/0/1 {
    unit 0 {
        family inet {
            address 192.168.14.2/24;
        }
    }
}
user@device2# show protocols
ospf {
    area 0.0.0.0 {
        interface ge-0/0/1.0 {
        priority 0;
        }
    }
}
```

A. The device with the highest IP address is elected as the DR.

B. The OSPF state will be stuck in the ExStart state.

C. The OSPF state will be stuck in the 2Way state.

D. The device with the lowest IP address is elected as the DR.

Suggested Answer: *B*

With both OSPF priorities set to 0, neither elects itself DR; adjacency remains 2-Way.

Currently there are no comments in this discussion, be the first to comment!

Question #16 *Topic 1*

Which two statements are correct about EVPN/VXLAN deployments? (Choose two.)

A. VNIs are used for encapsulating and de-encapsulating traffic entering and leaving the tunnels.

B. VTEPs are used for encapsulating and de-encapsulating traffic entering and leaving the tunnels.

C. VTEPs are used to identify broadcast domains within an EVPN/VXLAN environment.

D. VNIs are used to identify broadcast domains within an EVPN/VXLAN environment.

Suggested Answer: *B, D*
VTEPs encapsulate traffic; VNIs identify broadcast domains.

Currently there are no comments in this discussion, be the first to comment!

Question #17 *Topic 1*

Which statement accurately describes the operation of OSPF within the Junos OS?

A. OSPF calculates routes using a distance vector algorithm.

B. OSPF is used for routing information and neighbor discovery within a single autonomous system (AS).

C. OSPF does not automatically advertise directly connected routes.

D. OSPF is used for routing information and neighbor discovery between multiple autonomous systems.

Suggested Answer: *B*
OSPF provides routing and neighbor discovery within one autonomous system.

Currently there are no comments in this discussion, be the first to comment!

Question #18 *Topic 1*

You run a multivendor switching environment where you have configured VSTP. You have 450 VLANs and notice that some of your VLANs do not function properly.

How should you change the configuration to get all 450 VLANs working?

A. Include the force-version stp; statement in your configuration.

B. Enable RSTP to handle additional VLANs.

C. Set the VLAN max-age to 3600 or more.

D. Increase the bridge priority on all VLANs to at least 16k.

Suggested Answer: *A*
Force-version enables VSTP to support more than its default VLAN limit.

mimo1000 Most Recent 2 months, 1 week ago

Selected Answer: B

correct answer is B

A- wrong because forces older STP behavior; it doesn't increase VSTP VLAN capacity

B- correct because RSTP — Provides a spanning-tree instance that can handle the VLANs not covered by VSTP.

upvoted 1 times

pudjen 4 months, 2 weeks ago

Selected Answer: B

RSTP runs one instance for all VLANs (unless using MSTP). It is multivendor compatible and supports any number of VLANs because VLANs are treated as Layer 2 segments over a single RSTP topology.

This is the standard, scalable, and interoperable solution. Correct

upvoted 2 times

Question #19 *Topic 1*

Click the Exhibit button.

Referring to the exhibit, which two statements are correct? (Choose two.)

```
user@router> show interfaces ge-0/0/11 extensive | find "Cos information"
  CoS information:
    Direction : Output
    CoS transmit queue                Bandwidth                Buffer Priority   Limit
                              %            bps     %            usec
    0 best-effort             r              r     r               0      low    none
    1 expedited-forwarding   10      100000000     r               0      low    none
    2 assured-forwarding     10      100000000     r               0      low   exact
    3 network-control         4       40000000     r               0      low   exact
```

A. The bandwidth reservation for queue 0 is 76%.

B. During times of no network congestion, traffic that is placed in queue 2 will be dropped if more than 10% of the interface bandwidth is used.

C. The bandwidth reservation for queue 0 is 100%.

D. During times of sustained network congestion, traffic that is placed in queue 2 will be dropped if more than 10% of the interface bandwidth is used.

Suggested Answer: *A, D*
Queues 1–3 reserve 24%, leaving 76% for queue 0; queue 2's 10% limit applies under congestion.

scotty11 Most Recent 5 months, 1 week ago

Selected Answer: AD

queue 0 is not set at 100...it gets the weighted share of what's left over from 100 - (10+10+4) = 76, no?

upvoted 2 times

Question #20 *Topic 1*

Click the Exhibit button.

You need to configure the non-RP routers in your network to dynamically learn the location of the RP using standard protocols only. You have already applied the configuration shown in the exhibit, but the routers have not learned the location of the RP.

Which additional step must you take to fulfill these requirements?

```
[edit]
user@R2# show protocols pim
rp {
    local {
        family inet {
            address 10.222.1.2;
        }
    }
}
interface all {
    mode sparse;
}
```

All non-RP routers are configured similarly to R5

```
user@R5> show pim rps
Instance: PIM.master

address-family INET

address-family INET6

[edit]
root@r5# show protocols pim
interface all {
    mode sparse;
}
```

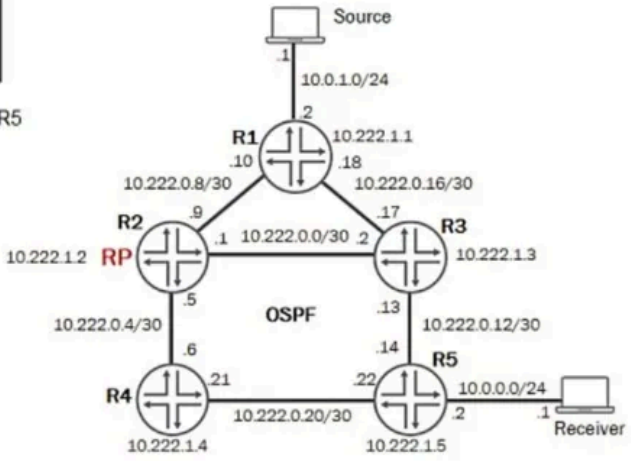

A. Configure MSDP.

B. Configure BSR.

C. Configure Anycast RP.

D. Configure Auto-RP.

Suggested Answer: *B*
Bootstrap Router (BSR) is the standards-based mechanism for dynamic RP discovery.

Currently there are no comments in this discussion, be the first to comment!

Question #21 *Topic 1*

Your router is discarding an EBGP route because the next hop is not directly connected.

Which BGP configuration would you use to override this behavior?

A. accept-remote-nexthop

B. multihop

C. advertise-inactive

D. multipath

Suggested Answer: *A*
accept-remote-nexthop permits an EBGP route with a non-directly-connected next hop.

Currently there are no comments in this discussion, be the first to comment!

Question #22 *Topic 1*

Which three statements about VSTP are correct? (Choose three.)

A. Separate BPDUs are flooded for each VSTP enabled VLAN.

B. VSTP is incompatible with RSTP.

C. VSTP is enabled by default on EX Series switches.

D. VSTP supports up to 253 unique spanning tree topologies.

E. A separate spanning tree instance is generated for each VLAN.

Suggested Answer: *A, D, E*
VSTP has per-VLAN instances and BPDUs, with up to 253 unique topologies.

northernlightx Most Recent 8 months ago

Selected Answer: ADE

RSTP is the default; VSTP must be manually configured

upvoted 3 times

Question #23 *Topic 1*

Click the Exhibit button.

What is the OSPF router type shown in the exhibit for router 192.168.2.1?

```
user@router> show ospf database router extensive
    OSPF database, Area 0.0.0.0
 Type       ID               Adv Rtr           Seq      Age  Opt  Cksum  Len
Router   192.168.2.1      192.168.2.1      0x8000000d   191  0x22 0x8e91  72
  bits 0x1, link count 4
  id 192.168.1.1, data 172.20.77.2, Type PointToPoint (1)
    Topology count: 0, Default metric: 1
  id 172.20.77.0, data 255.255.255.252, Type Stub (3)
    Topology count: 0, Default metric: 1
  id 172.20.66.2, data 172.20.66.2, Type Transit (2)
    Topology count: 0, Default metric: 1
  id 192.168.2.1, data 255.255.255.255, Type Stub (3)
    Topology count: 0, Default metric: 0
  Topology default (ID 0)
    Type: Transit, Node ID: 172.20.66.2
      Metric: 1, Bidirectional
    Type: PointToPoint, Node ID: 192.168.1.1
      Metric: 1, Bidirectional
  Aging timer 00:56:48
  Installed 00:03:08 ago, expires in 00:56:49, sent 00:03:06 ago
  Last changed 01:16:32 ago, Change count: 3
```

A. neither an ABR nor an ASBR

B. an ASBR

C. both an ABR and an ASBR

D. an ABR

Suggested Answer: *B*
The router advertises a Type 7 default-information LSA, identifying it as an ASBR.

pudjen Most Recent 4 months, 2 weeks ago

Selected Answer: D

The Bit Meaning:

0x1 B-Bit → ABR (Area Border Router)

0x2 E-Bit → ASBR (AS Boundary Router)

0x3 Both (ABR + ASBR)

0x0 neither

upvoted 4 times

Question #24 *Topic 1*

You must implement EVPN signaling on an EX Series device that is configured with both underlay and overlay networks.

Which network protocol accomplishes this task?

A. OSPF underlay network

B. IS-IS underlay network

C. MPLS overlay network

D. EBGP overlay network

Suggested Answer: *D*
EBGP overlay carries EVPN signaling between VTEPs.

Currently there are no comments in this discussion, be the first to comment!

Question #25 *Topic 1*

Click the Exhibit button.

You are receiving the same BGP Internet routes on R1 from both upstream ISPs. You are asked to load-balance traffic destined to the Internet across both ISPs.

Referring to the exhibit, which BGP solution should you use?

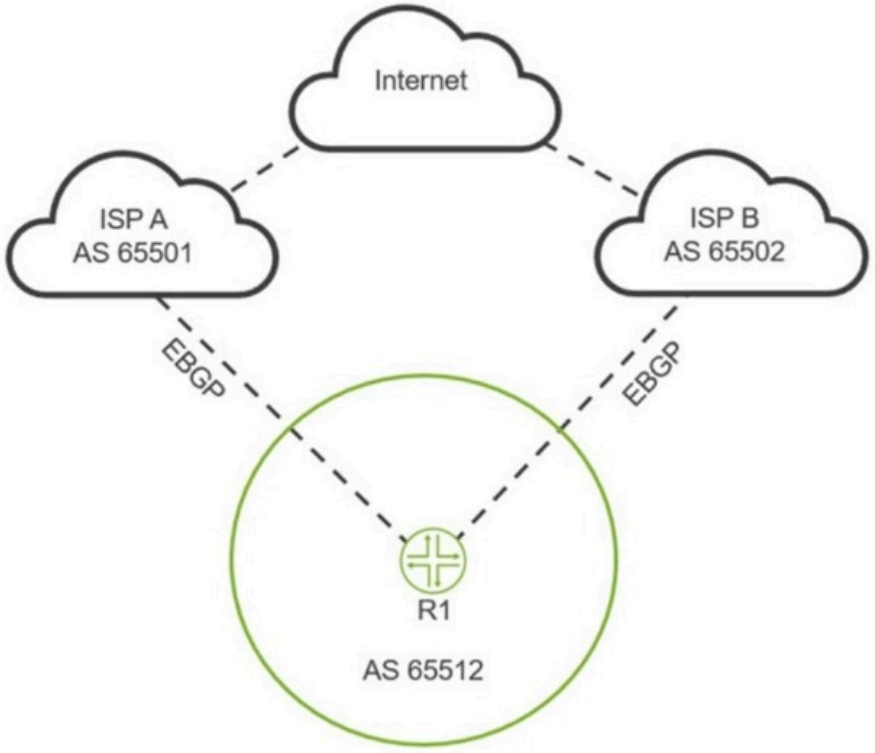

A. Use the multihop feature on R1.

B. Use the multipath multiple-as feature on R1.

C. Use the prefix limit feature on R1.

D. Use the damping feature on R1.

Suggested Answer: *B*
Multipath multiple-as permits load balancing across equivalent routes learned from different ASes.

Currently there are no comments in this discussion, be the first to comment!

Question #26 *Topic 1*

Which two statements are correct about OSPFv2 and OSPFv3? (Choose two.)

A. OSPFv2 carries prefix information in LSAs.

B. OSPFv3 is processed per subnet.

C. OSPFv2 and OSPFv3 require an Area 0.

D. OSPFv3 carries flooding scope in LSAs.

Suggested Answer: *A, D*
OSPFv2 carries prefixes in LSAs; OSPFv3 LSAs have flooding scope.

Currently there are no comments in this discussion, be the first to comment!

Question #27 *Topic 1*

Click the Exhibit button.

Referring to the exhibit, which two statements are correct? (Choose two.)

```
user@R1> show route protocol bgp
inet.0: 7 destinations, 11 routes (7 active, 0 holddown, 2 hidden)
+ = Active Route, - = Last Active, * = Both
172.16.10.1/32 *[BGP/170] 00:29:40, localpref 100
                AS path: 200 I
              > to 192.168.10.1 via ge-1/0/0.2
                to 192.168.20.1 via ge-1/0/1.3
               [BGP/170] 00:29:36, localpref 100
               AS path: 200 I
              > to 192.168.20.1 via ge-1/0/1.3
```

A. The BGP configuration is for IBGP.

B. The BGP configuration includes the multipath parameter.

C. This route has two next hops available.

D. This route has a hidden next hop.

Suggested Answer: *A, C*
Two next hops are listed; the BGP/170 route is active, not hidden.

northernlightx Most Recent 8 months ago

Selected Answer: BC

D is wrong — A hidden next hop would be marked with an H

upvoted 3 times

Question #28 *Topic 1*

You have a P-VLAN that spans multiple switches.

In this scenario, how do you enable communication across the P-VLAN?

A. Configure trunk ports with inter-switch-link on the switches.

B. Configure trunk ports with private-vlan isolated on the switches.

C. Configure trunk ports with private-vlan community on the switches.

D. Configure trunk ports with isolated-vlan on the switches.

Suggested Answer: *A*

Use inter-switch-link trunk configuration to carry the private VLAN across switches.

Currently there are no comments in this discussion, be the first to comment!

Question #29 *Topic 1*

Click the Exhibit button.

Referring to the exhibit output, which statement is correct?

```
user@switch> show route table default-switch.evpn.0
2:192.168.100.1:1::5010::00:00:5e:00:01:01/304 MAC/IP
2:192.168.100.1:1::5010::2c:6b:f5:4b:b9:f0/304 MAC/IP
2:192.168.100.1:1::5020::00:00:5e:00:01:01/304 MAC/IP
2:192.168.100.1:1::5020::2c:6b:f5:4b:b9:f0/304 MAC/IP
2:192.168.100.2:1::5010::00:00:5e:00:01:01/304 MAC/IP
2:192.168.100.2:1::5010::2c:6b:f5:7b:d8:f0/304 MAC/IP
2:192.168.100.2:1::5020::00:00:5e:00:01:01/304 MAC/IP
2:192.168.100.2:1::5020::2c:6b:f5:7b:d8:f0/304 MAC/IP
2:192.168.100.11:1::5010::00:0c:29:23:2c:1b/304 MAC/IP
2:192.168.100.13:1::5020::00:0c:29:93:24:6b/304 MAC/IP
2:192.168.100.1:1::5010::00:00:5e:00:01:01::10.1.1.254/304 MAC/IP
2:192.168.100.1:1::5010::2c:6b:f5:4b:b9:f0::10.1.1.101/304 MAC/IP
2:192.168.100.1:1::5020::00:00:5e:00:01:01::10.1.2.254/304 MAC/IP
2:192.168.100.1:1::5020::2c:6b:f5:4b:b9:f0::10.1.2.101/304 MAC/IP
2:192.168.100.2:1::5010::00:00:5e:00:01:01::10.1.1.254/304 MAC/IP
2:192.168.100.2:1::5010::2c:6b:f5:7b:d8:f0::10.1.1.102/304 MAC/IP
2:192.168.100.2:1::5020::00:00:5e:00:01:01::10.1.2.254/304 MAC/IP
2:192.168.100.2:1::5020::2c:6b:f5:7b:d8:f0::10.1.2.102/304 MAC/IP
2:192.168.100.11:1::5010::00:0c:29:23:2c:1b::10.1.1.1/304 MAC/IP
2:192.168.100.13:1::5020::00:0c:29:93:24:6b::10.1.2.3/304 MAC/IP
```

A. The device with an IP address of 192.168.100.2 is attached to VNI 5010.

B. The output shows the router ID of the device sending the EVPN Type 2 routes.

C. The output shows the route distinguisher of the device sending the EVPN Type 2 routes.

D. IP addresses 10.1.1.1 and 10.1.2.3 are connected to the same VNI.

Suggested Answer: *D*

Currently there are no comments in this discussion, be the first to comment!

Question #30 *Topic 1*

Click the Exhibit button.

You are asked to configure VLAN load balancing on your network using MSTP.
Referring to the exhibit, which two statements are correct? (Choose two.)

```
master:0}[edit protocols mstp]
user@switch1# show
configuration-name main;
revision-level 1;
interface ge-0/0/2;
interface ge-0/0/3;
interface ge-0/0/4;
interface ge-0/0/5;
msti 1 {
    bridge-priority 8k;
    vlan 1-5;
}
msti 2 {
    bridge-priority 4k;
    vlan 6-10;
}
{master:0}[edit protocols mstp]
user@switch2# show
configuration-name main;
revision-level 1;
interface ge-0/0/2;
interface ge-0/0/3;
interface ge-0/0/4;
interface ge-0/0/5;
msti 1 {
    bridge-priority 4k;
    vlan 1-5;
}
msti 2 {
    bridge-priority 8k;
    vlan 6-10;
}
```

A. Switch1 will be the root bridge for msti 1.

B. Switch1 will be the root bridge for msti 2.

C. Switch1 will not assume the role of root bridge for both msti1 and msti2 if Switch2 goes down.

D. Switch1 will assume the role of root bridge for both msti1 and msti2 if Switch2 goes down.

Suggested Answer: *A, B*

Currently there are no comments in this discussion, be the first to comment!

Question #31 *Topic 1*

You are configuring CoS throughout your enterprise network using DSCP. You have configured MF classification on your edge devices and are using BA classifiers throughout the core. You are using the EZQoS template provided on your EX Series switches that are acting as your edge devices. You have loaded the configuration group and applied it to the appropriate interfaces. Classification and scheduling are working properly on your edge devices; however, traffic is not being classified correctly when it reaches your core devices.

In this scenario, which statement is correct about solving this problem?

A. You should configure and apply a policer to the edge devices' egress interfaces toward the core.

B. You must configure the core devices using the EZQoS template as well.

C. You should configure and apply rewrite rules on the edge devices' egress interfaces toward the core.

D. You must configure the edge devices to use BA classifiers instead of MF classifiers.

Suggested Answer: *C*
Apply egress rewrite rules so BA-classified core traffic sees the intended DSCP marking.

Currently there are no comments in this discussion, be the first to comment!

Question #32 *Topic 1*

You want to validate a recursive lookup for an EVPN route designation.

Which route table query will accomplish this task?

A. inet.2

B. default-switch.evpn.0

C. inet.3

D. vxlan.inet.0

Suggested Answer: *C*
inet.3 contains routes used for recursive resolution of EVPN next hops.

mimo1000 Most Recent 2 months, 1 week ago

Selected Answer: D

Recursive lookup = resolving the EVPN route's BGP next hop (the remote VTEP IP) so the switch knows

vxlan.inet.0 / :vxlan.inet.0

Reachability used for VXLAN tunnel/VTEP resolution

upvoted 1 times

Question #33 *Topic 1*

Click the Exhibit button.

You want to provide better performance for the video traffic that traverses your network. The video traffic enters your network without any class-of-service markings.

According to Juniper Networks, which two classification methods are performed by the routers shown in the exhibit? (Choose two.)



A. R1 performs behavior aggregate classification.

B. R1 performs multifield classification.

C. R2 and R3 perform multifield classification.

D. R2 and R3 perform behavior aggregate classification.

Suggested Answer: *B, D*
Unmarked incoming video requires multifield classification at R1; downstream routers classify by the resulting behavior aggregate.

Currently there are no comments in this discussion, be the first to comment!

Question #34 *Topic 1*

You are adding a new QFX Series switch to an EVPN-VXLAN IP fabric.

In this scenario, which two statements are correct? (Choose two.)

A. The encapsulation vxlan setting is configured under the protocols evpn hierarchy.

B. The family vpls signaling address family is configured under the BGP protocol.

C. The family evpn signaling address family is configured under the BGP protocol.

D. The loopback interface must be advertised using the BGP protocol.

Suggested Answer: *A, C*
Configure VXLAN encapsulation under EVPN and EVPN signaling under BGP.

mimo1000 Most Recent 2 months, 1 week ago

Selected Answer: AC

The loopback/VTEP address must be reachable through the underlay

upvoted 1 times

HarLikon 3 months, 1 week ago

Selected Answer: AC

we must have Loopback reachability but it is not a necessity to have it using BGP.

tested in LAB, A & C are correct

upvoted 1 times

Question #35 *Topic 1*

You are deploying a three-stage EVPN environment with VXLAN using EX and QFX Series switches. The leaf devices will perform the gateway services.

Which two statements are correct in this scenario? (Choose two.)

A. Only the leaf devices must support VXLAN capabilities.

B. The leaf devices will function as VTEPs.

C. Both the leaf and spine devices must support VXLAN capabilities.

D. The spine devices will function as VTEPs.

Suggested Answer: *A, B*
Leaf devices are VTEPs; spines need not perform VXLAN encapsulation.

Currently there are no comments in this discussion, be the first to comment!

Question #36 *Topic 1*

You have created a private community VLAN called RND. The private community VLAN works fine within switch S1, but traffic in the private RND community VLAN does not reach VLAN members connected to switch S2.

Which statement is correct in this scenario?

A. The RND community VLAN needs to have the same 802.1Q tag as its parent VLAN.

B. The RND community VLAN needs to have an associated 802.1Q tag associated with it.

C. The RND community VLAN needs to be stripped of all 802.1Q tags.

D. The RND community VLAN needs to be defined as an isolated VLAN.

Suggested Answer: *B*
The community VLAN needs an associated tag to traverse the inter-switch link.

Currently there are no comments in this discussion, be the first to comment!

Question #37 *Topic 1*

Click the Exhibit button.

You are receiving the 203.0.113.0/24 route from both upstream ISPs. You are asked to ensure that ISP A is the preferred ISP for traffic being sent to the 203.0.113.0/24 network from devices in AS 65512.

Referring to the exhibit, which two statements will accomplish this behavior? (Choose two.)

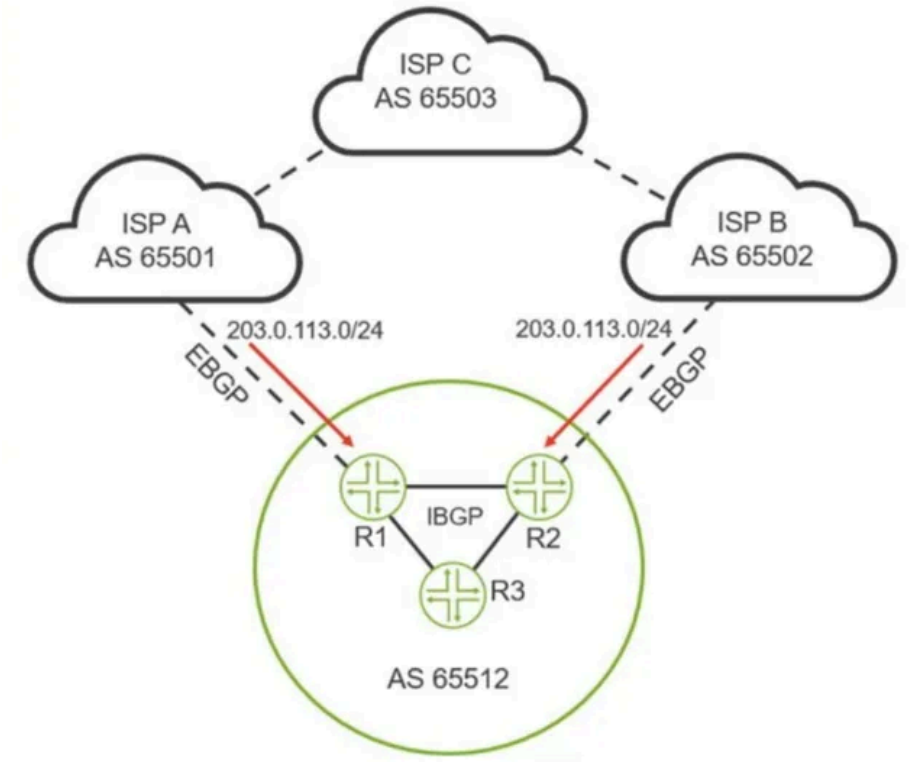

A. You should assign a local preference that is lower than 100 for the route learned from ISP A.

B. You should assign a local preference that is higher than 100 for the route learned from ISP A.

C. You should assign a local preference that is lower than 100 for the route learned from ISP B.

D. You should assign a local preference that is higher than 100 for the route learned from ISP B.

Suggested Answer: *B, C*
Local preference is shared within the AS; raise ISP A's or lower ISP B's preference to favor A.

Currently there are no comments in this discussion, be the first to comment!

Question #38 *Topic 1*

Your organization uses 802.1X with a RADIUS server. If the RADIUS server stops responding, you want the fallback action to continue to permit access for devices that currently have authorization but deny any new access attempts.

Which fallback action provides this capability?

A. deny

B. vlan-name

C. permit

D. use-cache

Suggested Answer: *D*
use-cache retains access for authorized cached clients while denying new authorizations.

Currently there are no comments in this discussion, be the first to comment!

Question #39 *Topic 1*

Which two statements are correct when using the no-loss forwarding class? (Choose two.)

A. Use the default scheduler map.

B. Use forwarding class sets.

C. Use priority-based now control.

D. Use the default drop profile.

Suggested Answer: *B, C*

No-loss forwarding uses forwarding-class sets and priority-based flow control.

Currently there are no comments in this discussion, be the first to comment!

Question #40 *Topic 1*

Which statement accurately describes the role of a multicast RP, specifically when using the PIM sparse mode?

A. The RP functions as a central point where multicast sources announce their existence and receivers send join requests to start multicast sessions.

B. The RP is primarily used in the PIM dense mode to flood multicast traffic throughout the network periodically.

C. The RP is responsible for forwarding all multicast traffic to all interfaces on the network, regardless of receiver interest.

D. The RP in the PIM sparse mode eliminates the need for any source-specific multicast (SSM) configurations.

Suggested Answer: *A*
In sparse mode, sources register with the RP and receivers join via it.

Currently there are no comments in this discussion, be the first to comment!

Question #41 *Topic 1*

Click the Exhibit button.

Referring to the exhibit, what will enable active routes from both peers?

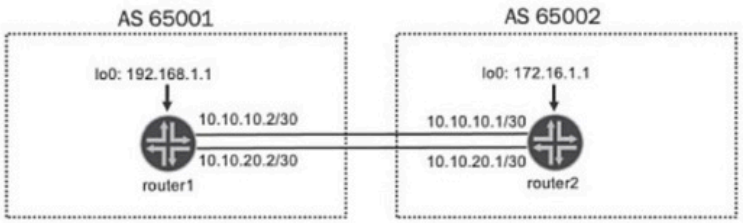


```
user@router1> show configuration protocols bgp group ext-peers
type external;
peer-as 65002;
neighbor 10.10.10.1;
neighbor 10.10.20.1;
}

user@router1> show bgp summary
[...]
Peer         AS      InPkt  OutPkt  OutQ  Flaps Last Up/Dwn State|#Active/Received/Accepted/Damped...
10.10.10.1   65002     53      53     0      0       22:48 4/4/4/0              0/0/0/0
10.10.20.1   65002     54      51     0      0       22:48 0/4/4/0              0/0/0/0
```

A. Configure neighbor 172.16.1.1 multipath under the ext-peers hierarchy.

B. Configure multipath under the ext-peers hierarchy.

C. Configure neighbor 172.16.1.1 under the ext-peers hierarchy.

D. Configure neighbor 10.10.20.2 multipath under the ext-peers hierarchy.

Suggested Answer: *B*

Enable multipath for the peer group so both peer routes can be active.

Currently there are no comments in this discussion, be the first to comment!

Question #42 *Topic 1*

Click the Exhibit button.

Referring to the exhibit, R2 receives a packet from the multicast source on its ge-0/0/4.0 interface.

Which two statements are correct in this scenario? (Choose two.)

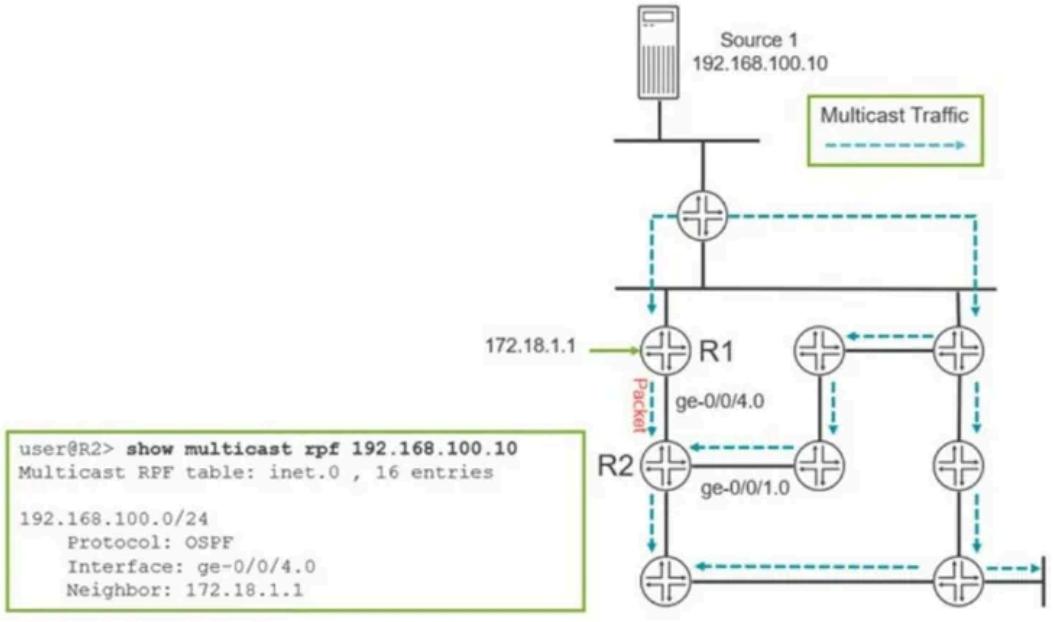

A. R2 verifies the existing unicast routing table and determines that this interface is not on the reverse path back to the source.

B. All interfaces other than ge-0/0/4.0 will be on the outgoing interface list.

C. The packet is discarded.

D. R2 determines that the packet is coming in on an interface that is on the reverse path back to the source.

Suggested Answer: *C, D*
The RPF check confirms the incoming interface is on the source path; multicast forwarding proceeds, not discard.

3bd99bf Most Recent 4 months, 2 weeks ago

Selected Answer: BD

A and C would be correct only if the package entered through an interface that does not match RPF

upvoted 1 times

Question #43 *Topic 1*

You are asked to establish authentication for users connecting to the corporate network. You must ensure that only corporate devices that are identified by MAC addresses are allowed to authenticate and connect. Authentication must be handled by a centralized database.

Which authentication method would you implement in this scenario?

A. MAC RADIUS

B. captive portal

C. single-secure supplicant mode

D. single supplicant mode

Suggested Answer: *A*
MAC RADIUS authenticates device MAC addresses against a centralized RADIUS database.

Currently there are no comments in this discussion, be the first to comment!

Question #44 *Topic 1*

Your Layer 2 network uses 802.1X to authenticate user devices connecting to the network. You are asked to include a new Layer 2 interface connection from the conference room in your network. You must ensure that only a single device is allowed to authenticate on this port at one time to avoid users from being able to plug in a rogue switch to this port.

In this scenario, which 802.1X method would you use for the new interface?

A. single-secure supplicant mode

B. multiple supplicant mode

C. single supplicant mode

D. MAC-RADIUS

Suggested Answer: *A*
Single-secure supplicant mode permits only one authenticated device and blocks additional devices.

Currently there are no comments in this discussion, be the first to comment!